ELECTRICAL

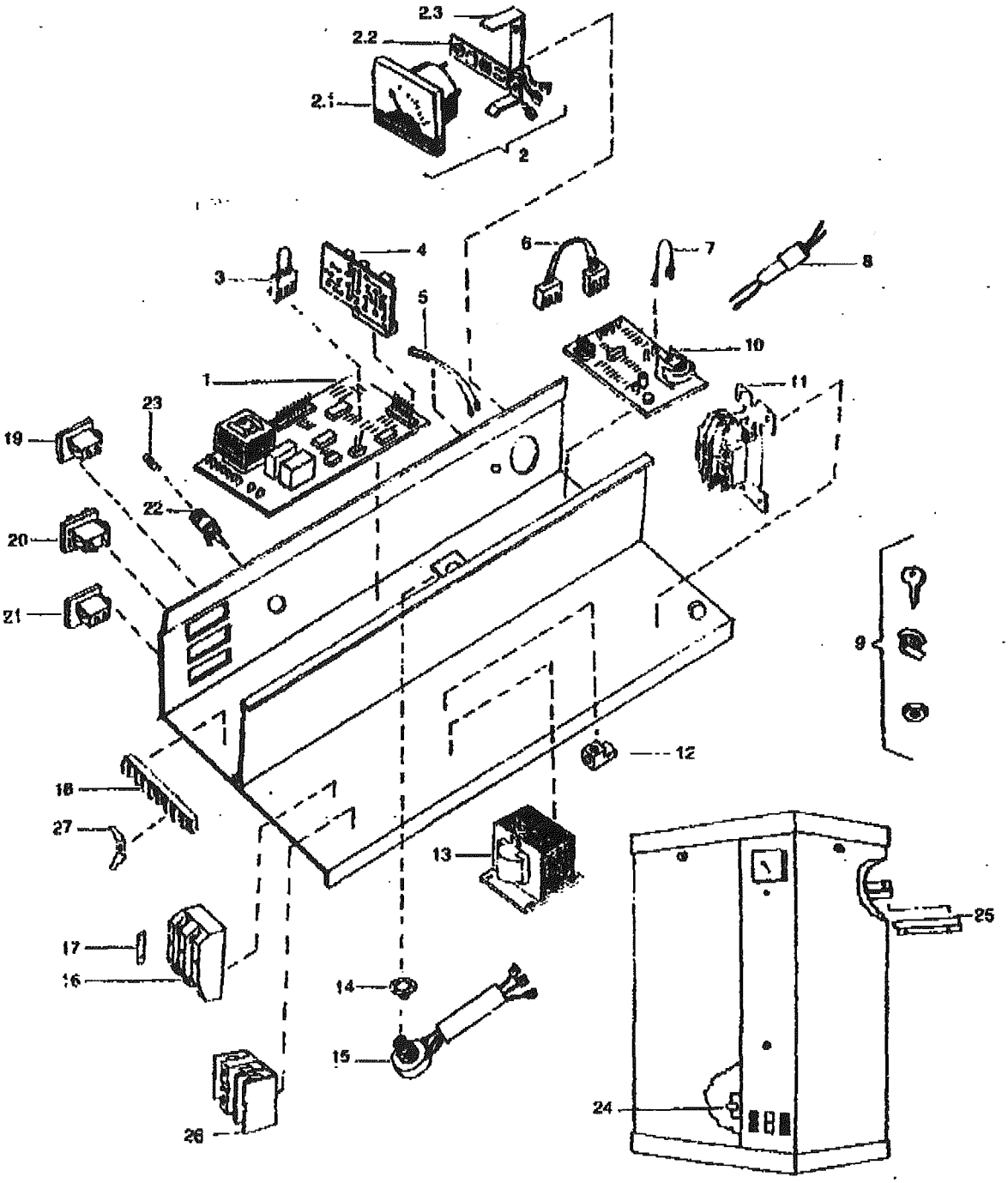
2.3
2.2
2.1
2
3
4
5
6
7
8
10
11
1
23
19
22
20
21
9
12
18
27
13
25
17
16
14
15
24
26

POS. NO.	DESCRIPTION	MODEL / NORTEC PART NO.	ES MK II 200												ES MK II 300												ES MK II 400									
			208	220	230	240	277	347	440	460	480	550	575	600	208	220	230	240	277	347	440	460	480	550	575	600	208	220	230	240	440	460	480	550	575	600
1	Electronic Basic Unit	132-4976	1	1	1	1	1	1	1	1	1	1	1	1	1	1	1	1	1	1	1	1	1	1	1	1	1	1	1	1	1	1	1	1	1	1
2	D.C. Voltmeter Assembly	132-6077	1	1	1	1	1	1	1	1	1	1	1	1	1	1	1	1	1	1	1	1	1	1	1	1	1	1	1	1	1	1	1	1	1	1
2.1	D.C. Voltmeter	132-3090	1	1	1	1	1	1	1	1	1	1	1	1	1	1	1	1	1	1	1	1	1	1	1	1	1	1	1	1	1	1	1	1	1	1
2.2	P.C. Board for D.C. Voltmeter	132-4601	1	1	1	1	1	1	1	1	1	1	1	1	1	1	1	1	1	1	1	1	1	1	1	1	1	1	1	1	1	1	1	1	1	1
2.3	Mounting Bracket	132-7093	1	1	1	1	1	1	1	1	1	1	1	1	1	1	1	1	1	1	1	1	1	1	1	1	1	1	1	1	1	1	1	1	1	1
3	Jumper Plug	132-4933	1	1	1	1	1	1	1	1	1	1	1	1	1	1	1	1	1	1	1	1	1	1	1	1	1	1	1	1	1	1	1	1	1	1
4	R.C. Timer P.C. Board 50/2	132-4938	1	1	1	1	1								1	1	1	1	1																	
	R.C. Timer P.C. Board 60/2	132-4939																									1	1	1	1						
	R.C. Timer P.C. Board 80/3	132-4940						1	1	1	1	1	1	1						1	1	1	1	1	1	1					1	1	1	1	1	1
5	High Water Level Light	132-3095	1	1	1	1	1	1	1	1	1	1	1	1	1	1	1	1	1	1	1	1	1	1	1	1	1	1	1	1	1	1	1	1	1	1
6	Five Wire Ribbon Cable	132-3958	1	1	1	1	1	1	1	1	1	1	1	1	1	1	1	1	1	1	1	1	1	1	1	1	1	1	1	1	1	1	1	1	1	1
7	Voltage Jumper Wire	132-4935	1	1	1	1	1	1	1	1	1	1	1	1	1	1	1	1	1	1	1	1	1	1	1	1	1	1	1	1	1	1	1	1	1	1
8	Sensor Assembly - Short	132-6111	1	1	1	1	1	1	1	1	1	1	1	1	1	1	1	1	1	1	1	1	1	1	1	1	1	1	1	1	1	1	1	1	1	1
	Sensor Assembly - Long	132-6222																																		
9	Door Lock Assembly	132-3101	2	2	2	2	2	2	2	2	2	2	2	2	2	2	2	2	2	2	2	2	2	2	2	2	2	2	2	2	2	2	2	2	2	2
10	Current Transformer PCB	132-4947						1	1	1	1	1	1	1																						
	Current Transformer PCB	132-4948																		1	1	1	1	1	1	1					1	1	1	1	1	1
	Current Transformer PCB	132-4949																																		
	Current Transformer PCB	132-4950	1	1	1	1	1																													
	Current Transformer PCB	132-4951													1	1	1	1	1								1	1	1	1						
	Current Transformer PCB	132-4957																																		
	Current Transformer PCB	132-4958																																		
	Current Transformer PCB	132-4995																																		
11	Contactor 30A	132-3013	1	1	1	1	1	1	1	1	1	1	1	1					1	1	1	1	1	1	1	1					1	1	1	1	1	1
	Contactor 40A	132-3014													1	1	1	1									1	1	1	1						
	Contactor 62A	132-3015																																		
	Contactor 93A	132-3019																																		
12	Ground Lug	132-3020	1	1	1	1	1	1	1	1	1	1	1	1	1	1	1	1	1	1	1	1	1	1	1	1	1	1	1	1	1	1	1	1	1	1
13	Transformer 208/24V	132-3208	1												1												1									
	Transformer 230/24V	132-3230		1	1	1										1	1	1										1	1	1						
	Transformer 277/24V	132-3273					1												1																	
	Transformer 347/24V	132-3347						1												1																
	Transformer 460/24V	132-3460							1	1	1										1	1	1								1	1	1			
	Transformer 600/24V	132-3575										1	1	1										1	1	1								1	1	1
14	Capacity Dial	132-1299	1	1	1	1	1	1	1	1	1	1	1	1	1	1	1	1	1	1	1	1	1	1	1	1	1	1	1	1	1	1	1	1	1	1
15	Capacity Potentiometer	132-4009	1	1	1	1	1	1	1	1	1	1	1	1	1	1	1	1	1	1	1	1	1	1	1	1	1	1	1	1	1	1	1	1	1	1

ELECTRICAL

POS. NO.	DESCRIPTION	NORTEC PART NO.	ES MK II 500										ES MK II 600										ES MK II 700										ES MK II [illegible]									
		MODEL	VOLTAGE																																							
			208	220	230	240	440	460	480	550	575	600	208	220	230	240	440	460	480	550	575	600	208	220	230	240	440	460	480	550	575	600	208	220	230	240	440	460	480	550	[illegible]	[illegible]
1	Electronic Basic Unit	132-4976	1	1	1	1	1	1	1	1	1	1	1	1	1	1	1	1	1	1	1	1	2	2	2	2	2	2	2	2	2	2	2	2	2	2	2	2	2	2	2	2
2	D.C. Voltmeter Assembly	132-6077	1	1	1	1	1	1	1	1	1	1	1	1	1	1	1	1	1	1	1	1	2	2	2	2	2	2	2	2	2	2	2	2	2	2	2	2	2	2	2	2
2.1	D.C. Voltmeter	132-3090	1	1	1	1	1	1	1	1	1	1	1	1	1	1	1	1	1	1	1	1	2	2	2	2	2	2	2	2	2	2	2	2	2	2	2	2	2	2	2	2
2.2	P.C. Board for D C. Voltmeter	132-4601	1	1	1	1	1	1	1	1	1	1	1	1	1	1	1	1	1	1	1	1	2	2	2	2	2	2	2	2	2	2	2	2	2	2	2	2	2	2	2	2
2.3	Mounting Bracket	132-7093	1	1	1	1	1	1	1	1	1	1	1	1	1	1	1	1	1	1	1	1	2	2	2	2	2	2	2	2	2	2	2	2	2	2	2	2	2	2	2	2
3	Jumper Plug	132-4933	1	1	1	1	1	1	1	1	1	1	1	1	1	1	1	1	1	1	1	1	2	2	2	2	2	2	2	2	2	2	2	2	2	2	2	2	2	2	2	2
4	R.C. Timer P.C. Board 50/2	132-4938																																								
	R.C. Timer P.C. Board 60/2	132-4939	1	1	1	1	1	1	1	1	1	1	1	1	1	1	1	1	1	1	1	1	2	2	2	2	2	2	2	2	2	2	2	2	2	2	2	2	2	2	2	2
	R.C. Timer P.C. Board 60/3	132-4940																																								
5	High Water Level Light	132-3095	1	1	1	1	1	1	1	1	1	1	1	1	1	1	1	1	1	1	1	1	2	2	2	2	2	2	2	2	2	2	2	2	2	2	2	2	2	2	2	2
6	Five Wire Ribbon Cable	132-3958	1	1	1	1	1	1	1	1	1	1	1	1	1	1	1	1	1	1	1	1	2	2	2	2	2	2	2	2	2	2	2	2	2	2	2	2	2	2	2	2
7	Voltage Jumper Wire	132-4935	1	1	1	1	1	1	1	1	1	1	1	1	1	1	1	1	1	1	1	1	2	2	2	2	2	2	2	2	2	2	2	2	2	2	2	2	2	2	2	2
8	Sensor Assembly - Short	132-6111	1	1	1	1	1	1	1	1	1	1	1	1	1	1	1	1	1	1	1	1	1	1	1	1	1	1	1	1	1	1	1	1	1	1	1	1	1	1	1	1
	Sensor Assembly - Long	132-6222																					1	1	1	1	1	1	1	1	1	1	1	1	1	1	1	1	1	1	1	1
9	Door Lock Assembly	132-3101	2	2	2	2	2	2	2	2	2	2	2	2	2	2	2	2	2	2	2	2	3	3	3	3	3	3	3	3	3	3	3	3	3	3	3	3	3	3	3	3
10	Current Transformer PCB	132-4947																																								
	Current Transformer PCB	132-4948																																								
	Current Transformer PCB	132-4949															1	1	1																		2	2	2			
	Current Transformer PCB	132-4950																																								
	Current Transformer PCB	132-4951	1	1	1	1																	2	2	2	2																
	Current Transformer PCB	132-4957					1	1	1	1	1	1															2	2	2	2	2	2										
	Current Transformer PCB	132-4958																		1	1	1																		2	2	2
	Current Transformer PCB	132-4995											1	1	1	1																	2	2	2	2						
11	Contactor 30A	132-3013																																								
	Contactor 40A	132-3014					1	1	1	1	1	1								1	1	1					2	2	2	2	2	2								2	2	2
	Contactor 62A	132-3015	1	1	1	1							2	2	2	2	1	1	1				2	2	2	2							4	4	4	4	2	2	2			
	Contactor 93A	132-3019																																								
12	Ground Lug	132-3020	1	1	1	1	1	1	1	1	1	1	1	1	1	1	1	1	1	1	1	1	1	1	1	1	1	1	1	1	1	1	1	1	1	1	1	1	1	1	1	1
13	Transformer 208/24V	132-3208	1										1										2										2									
	Transformer 230/24V	132-3230		1	1	1								1	1	1								2	2	2								2	2	2						
	Transformer 277/24V	132-3279																																								
	Transformer 347/24V	132-3347																																								
	Transformer 460/24V	132-3460					1	1	1								1	1	1								2	2	2								2	2	2			
	Transformer 600/24V	132-3575								1	1	1								1	1	1								2	2	2								2	2	2
14	Capacity Dial	132-1299	1	1	1	1	1	1	1	1	1	1	1	1	1	1	1	1	1	1	1	1	2	2	2	2	2	2	2	2	2	2	2	2	2	2	2	2	2	2	2	2
15	Capacity Potentiometer	132-4008	1	1	1	1	1	1	1	1	1	1	1	1	1	1	1	1	1	1	1	1	2	2	2	2	2	2	2	2	2	2	2	2	2	2	2	2	2	2	2	2

POS. NO.	DESCRIPTION	NORTEC PART NO.	ES MK II 200												ES MK II 300												ES MK II 400									
			VOLTAGE																																	
			208	220	230	240	277	347	440	460	480	550	575	600	208	220	230	240	277	347	440	460	480	550	575	600	208	220	230	240	440	460	480	550	575	600
16	Fuse Block for two JJN Fuses	142-3181	1	1	1	1																														
	Fuse Block for two JJN Fuses	142-3183													1	1	1	1																		
	Fuse Block for three JJN Fuses	142-3184																									1	1	1	1						
	Fuse Block for two KTK Fuses	132-3042					1	1	1	1	1	1	1	1										1	1	1										
	Fuse Block for three KTK Fuses	142-3185																														1	1	1	1	1
	Fuse Block for two JJS Fuses	142-3182																	1	1	1	1	1													
	Fuse Block for three JJS Fuses	142-3186																																		
	Fuse Block for three JJS Fuses	142-3187																													1					
17	Fuse JJN-20	142-3171	2	2	2	2																														
	Fuse JJN-35	142-3172																2										3	3	3						
	Fuse JJN-40	142-3173													2	2	2										3									
	Fuse JJN-50	142-3175																																		
	Fuse JJN-60	142-3176																																		
	Fuse KTK-7	142-3144												2																						
	Fuse KTK-8	142-3145										2	2																							
	Fuse KTK-9	142-3146								2	2																									
	Fuse KTK-10	142-3147							2																											
	Fuse KTK-12	142-3148						2																												3
	Fuse KTK-15	142-3149					2																	2	2	2						3	3	3	3	
	Fuse JJS-20	142-3156																			2	2	2								3					
	Fuse JJS-25	142-3157																		2																
	Fuse JJS-30	142-3158																	2																	
	Fuse JJS-35	142-3159																																		
	Fuse JJS-40	142-3160																																		
	Fuse JJS-45	142-3161																																		
	Fuse JJS-50	142-3162																																		
	Fuse JJS-60	142-3163																																		
18	Control Terminal Strip	132-3086	1	1	1	1	1	1	1	1	1	1	1	1	1	1	1	1	1	1	1	1	1	1	1	1	1	1	1	1	1	1	1	1	1	1
19	Green Lamp	132-3096	1	1	1	1	1	1	1	1	1	1	1	1	1	1	1	1	1	1	1	1	1	1	1	1	1	1	1	1	1	1	1	1	1	1
20	Rocker Switch	132-3097	1	1	1	1	1	1	1	1	1	1	1	1	1	1	1	1	1	1	1	1	1	1	1	1	1	1	1	1	1	1	1	1	1	1
21	Amber Lamp	132-3098	1	1	1	1	1	1	1	1	1	1	1	1	1	1	1	1	1	1	1	1	1	1	1	1	1	1	1	1	1	1	1	1	1	1
22	Fuse Holder	132-5052	1	1	1	1	1	1	1	1	1	1	1	1	1	1	1	1	1	1	1	1	1	1	1	1	1	1	1	1	1	1	1	1	1	1
23	Fuse 3A	142-3056	1	1	1	1	1	1	1	1	1	1	1	1	1	1	1	1	1	1	1	1	1	1	1	1	1	1	1	1	1	1	1	1	1	1
24	Interlock Switch	132-3091	1	1	1	1	1	1	1	1	1	1	1	1	1	1	1	1	1	1	1	1	1	1	1	1	1	1	1	1	1	1	1	1	1	1
25	Wall Mounting Bracket	142-7020	1	1	1	1	1	1	1	1	1	1	1	1	1	1	1	1	1	1	1	1	1	1	1	1	1	1	1	1	1	1	1	1	1	1
	Wall Mounting Bracket	142-7040																																		
26	Terminal Block - 95A - 3 Phase	132-3027																																		
	Terminal Block - 150A - 3 Phase	132-3028																																		
	Terminal Block - 220A - 3 Phase	132-3029																																		
27	Terminal Strip Lug	132-5500	7	7	7	7	7	7	7	7	7	7	7	7	7	7	7	7	7	7	7	7	7	7	7	7	7	7	7	7	7	7	7	7	7	7

POS. NO.	DESCRIPTION	NORTEC PART NO.	ES MK II 500										ES MK II 600										ES MK II 700										ES MK II 800									
			VOLTAGE																																							
			208	220	230	240	440	460	480	550	575	600	208	220	230	240	440	460	480	550	575	600	208	220	230	240	440	460	480	550	575	600	208	220	230	240	440	460	480	550	575	600
16	Fuse Block for two JJN Fuses	142-3181																																								
	Fuse Block for two JJN Fuses	142-3183																																								
	Fuse Block for three JJN Fuses	142-3184	2	2	2	2							2	2	2	2							4	4	4	4							4	4	4	4						
	Fuse Block for two KTK Fuses	132-3042																																								
	Fuse Block for three KTK Fuses	142-3185																																								
	Fuse Block for two JJS Fuses	142-3182																																								
	Fuse Block for three JJS Fuses	142-3186					1	1	1											1	1	1					2	2	2												2	2	2
	Fuse Block for three JJS Fuses	142-3187								1	1	1					2	2	2											2	2	2				4	4	4				
17	Fuse JJN-20	142-3171																																								
	Fuse JJN-35	142-3172		6	6	6																		12	12	12																
	Fuse JJN-40	142-3173	6																				12																			
	Fuse JJN-50	142-3175												6	6	6																		12	12	12						
	Fuse JJN-60	142-3176											6																				12									
	Fuse KTK-7	142-3144																																								
	Fuse KTK-8	142-3145																																								
	Fuse KTK-9	142-3146																																								
	Fuse KTK-10	142-3147																																								
	Fuse KTK-12	142-3148																																								
	Fuse KTK-15	142-3149																																								
	Fuse JJS-20	142-3156																																								
	Fuse JJS-25	142-3157										3					6	6	6													6					12	12	12			
	Fuse JJS-30	142-3158								3	3																			6	6											
	Fuse JJS-35	142-3159					3	3	3																		6	6	6													
	Fuse JJS-40	142-3160																				3																				6
	Fuse JJS-45	142-3161																		3	3																			6	6	
	Fuse JJS-50	142-3162																																								
	Fuse JJS-60	142-3163																																								
18	Control Terminal Strip	132-3088	1	1	1	1	1	1	1	1	1	1	1	1	1	1	1	1	1	1	1	1	2	2	2	2	2	2	2	2	2	2	2	2	2	2	2	2	2	2	2	2
19	Green Lamp	132-3096	1	1	1	1	1	1	1	1	1	1	1	1	1	1	1	1	1	1	1	1	2	2	2	2	2	2	2	2	2	2	2	2	2	2	2	2	2	2	2	2
20	Rocker Switch	132-3097	1	1	1	1	1	1	1	1	1	1	1	1	1	1	1	1	1	1	1	1	2	2	2	2	2	2	2	2	2	2	2	2	2	2	2	2	2	2	2	2
21	Amber Lamp	132-3098	1	1	1	1	1	1	1	1	1	1	1	1	1	1	1	1	1	1	1	1	2	2	2	2	2	2	2	2	2	2	2	2	2	2	2	2	2	2	2	2
22	Fuse Holder	132-5062	1	1	1	1	1	1	1	1	1	1	1	1	1	1	1	1	1	1	1	1	2	2	2	2	2	2	2	2	2	2	2	2	2	2	2	2	2	2	2	2
23	Fuse 3A	142-3056	1	1	1	1	1	1	1	1	1	1	1	1	1	1	1	1	1	1	1	1	2	2	2	2	2	2	2	2	2	2	2	2	2	2	2	2	2	2	2	2
24	Interlock Switch	132-3091	1	1	1	1	1	1	1	1	1	1	1	1	1	1	1	1	1	1	1	1	2	2	2	2	2	2	2	2	2	2	2	2	2	2	2	2	2	2	2	2
25	Wall Mounting Bracket	142-7020	1	1	1	1	1	1	1	1	1	1	1	1	1	1	1	1	1	1	1	1																				
	Wall Mounting Bracket	142-7040																					1	1	1	1	1	1	1	1	1	1	1	1	1	1	1	1	1	1	1	1
26	Terminal Block - 95A - 3 Phase	132-3027	1	1	1	1											1	1	1								1	1	1	1	1	1								1	1	1
	Terminal Block - 150A - 3 Phase	132-3028											1	1	1	1							1	1	1	1											1	1	1			
	Terminal Block - 220A - 3 Phase	132-3029																															1	1	1	1						
27	Terminal Strip Lug	132-5500	7	7	7	7	7	7	7	7	7	7	7	7	7	7	7	7	7	7	7	7	14	14	14	14	14	14	14	14	14	14	14	14	14	14	14	14	14	14	14	14