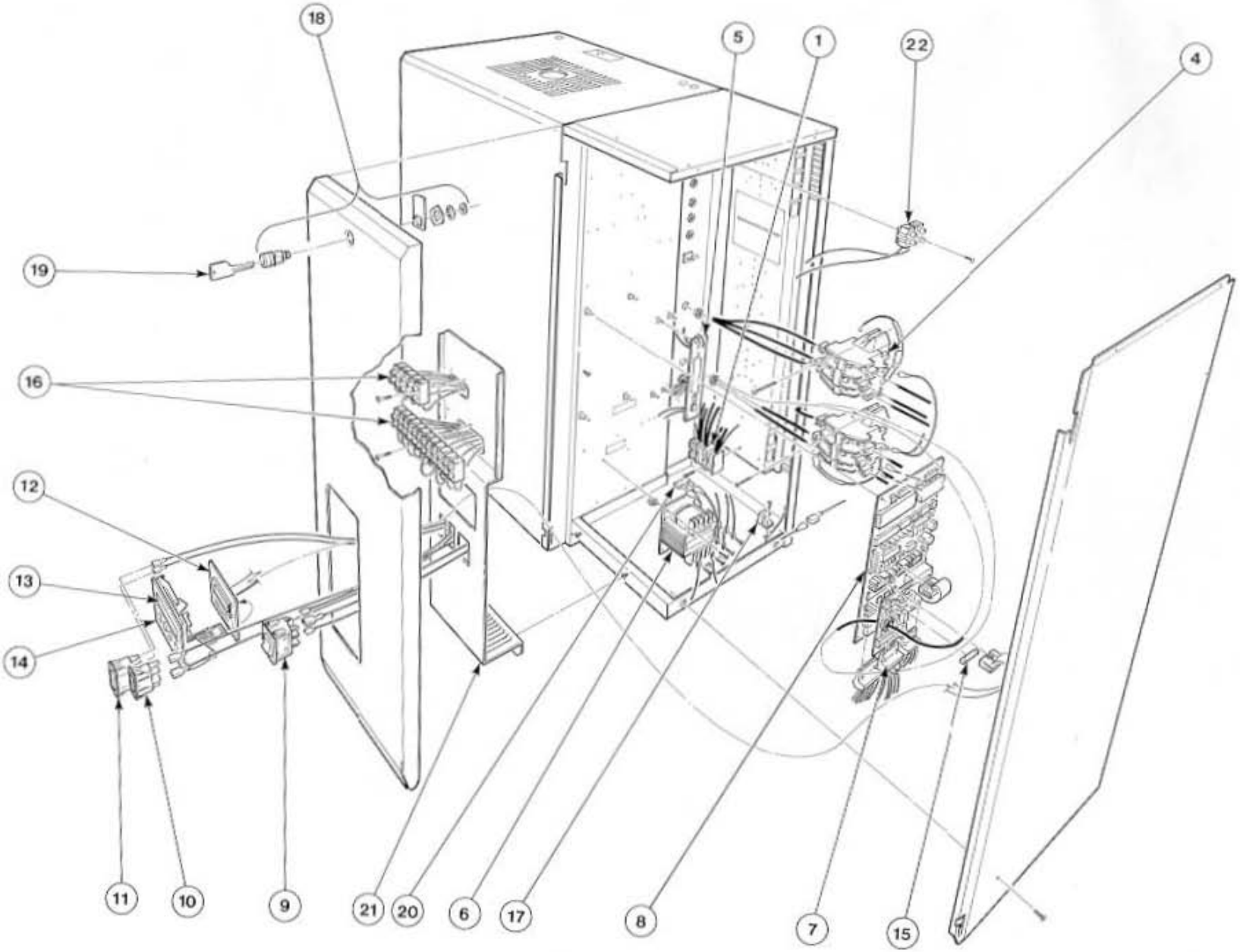
18
5
1
22
4
19
16
12
13
14
11
10
9
21
20
6
17
8
7
15

ELECTRICAL REPLACEMENT PARTS FOR NHB/NHP/NHMC MODELS

ITEM NO.	DESCRIPTION		NORTEC P/N		SINGLE PHASE													THREE PHASE																											
			MODEL		005	010						020						020				030				050				075				100				150				200			
				VOLTS/PH	/110-120/1	/208/1	/220-240/1	/277/1	/347/1	/440-480/1	/550-600/1	/208/1	/220-240/1	/277/1	/347/1	/440-480/1	/550-600/1	/208/3	/220-240/3	/440-480/3	/550-600/3	/208/3	/220-240/3	/440-480/3	/550-600/3	/208/3	/220-240/3	/440-480/3	/550-600/3	/208/3	/220-240/3	/440-480/3	/550-600/3	/208/3	/220-240/3	/440-480/3	/550-600/3	/208/3	/220-240/3	/440-480/3	/550-600/3	/208/3	/220-240/3	/440-480/3	/550-600/3
1	TERMINAL BLOCK	2P 95A	132-3001		1	1	1	1	1	1	1	1	1	1	1	1	1																											
	(PRIMARY VOLTAGE)	3P 95A	132-3027															1	1	1	1	1	1	1	1	1	1	1	1			1	1			1	1			1	1				1
		3P 150A	132-3028																											1	1			1	1									1	
		3P 310A	132-3030																																			1	1			1	1		
	OPTIONAL PRIMARY VOLT.	2P JJN	142-3183		1	1	1	1				1	1	1																														
	FUSEBLOCK	3P JJN	142-3184															1	1			1	1			2	2			2	2			2	2			4	4			4	4		
	(not shown)	3P JJS	142-3186																	1	1			1	1			1	1			1	1			2	1			2	2			4	2
		2P JJS	142-3189						1	1	1				1	1	1																												
	OPTIONAL PRIMARY VOLT.	40A JJS	142-3160						2	2	2				2	2	2			3	3			3	3			3	3			3	3			6	3			6	6			12	6
	INTERNAL FUSE	40A JJN	142-3173		2	2	2	2				2	2	2				3	3			3	3			6	6																		
	(not shown)	45A JJN	142-3174																											6	6							12	12						
		60A JJN	142-3176																															6	6							12	12		
4	PRIMARY VOLTAGE	2P 30A	145-3013		1	1	1	1	1	1	1				1	1	1																											
	CONTACTOR c/w 24V COIL	3P 30A	132-3013															1	1	1	1			1	1	2	2	1	1				1			2					2			4	
		3P 40 A	132-3014									1	1	1								1	1							2	2	1					1	4	4	2					2
		3P 63A	132-3015																															2	2							4	4		
5	HIGH WATER SENSOR		147-4998		1																																								
	PC BOARD ASSLY.		147-4994			1	1	1	1	1	1	1	1	1	1	1	1	1	1	1	1	1	1	1	1	1	1	1	1	1	1	1	1	1	1	1	1	2	2	2	2	2	2	2	2
6	PRIMARY TO 24 V	110-120V	142-3110		1																																								
	TRANSFORMER - 75 VA	208V	132-3208			1						1						1				1				1				1				1				2				2			
		220-240V	132-3230				1						1						1				1				1				1				1				2				2		
		277V	132-3277					1						1																															
		347V	132-3347						1						1																														
		380V	132-3380																																										
		416V	132-3417																																										
		440-480V	132-3460							1						1				1				1				1				1				1				2				2	
		550-600V	132-3575								1						1				1				1				1				1				1				2				2
7	PC BOARD	NHB	145-3008		2	2	2	2	2	2	2	2	2	2	2	2	2	2	2	2	2	2	2	2	2	2	2	2	2	2	2	2	2	2	2	2	2	4	4	4	4	4	4	4	4
	TERMINAL STRIP	NHP	145-3008		3	3	3	3	3	3	3	3	3	3	3	3	3	3	3	3	3	3	3	3	3	3	3	3	3	3	3	3	3	3	3	3	3	6	6	6	6	6	6	6	6
		NHMC	145-3008		3	3	3	3	3	3	3	3	3	3	3	3	3	3	3	3	3	3	3	3	3	3	3	3	3	3	3	3	3	3	3	3	3	6	6	6	6	6	6	6	6
8	MAIN PC BOARD	NHB	135-9512		1	1	1	1	1	1	1	1	1	1	1	1	1	1	1	1	1	1	1	1	1	1	1	1	1	1	1	1	1	1	1	1	1	2	2	2	2	2	2	2	2
		NHP	135-9521A		1	1	1	1	1	1	1																																		
		NHP	135-9521B									1	1	1	1	1	1	1	1	1	1	1	1	1	1	1	1	1	1																
		NHP	135-9521C																											1	1	1	1	1	1	1	1	2	2	2	2	2	2	2	2
		NHMC	135-9520		1	1	1	1	1	1	1	1	1	1	1		1	1	1	1	1	1	1	1	1	1	1	1	1	1	1	1	1	1	1	1	1	2	2	2	2	2	2	2	2
9	ON/OFF DRAIN SWITCH		145-3001		1	1	1	1	1	1	1	1	1	1	1	1	1	1	1	1	1	1	1	1	1	1	1	1	1	1	1	1	1	1	1	1	1	2	2	2	2	2	2	2	2
10	INDICATOR LAMP	GREEN	135-3027		1	1	1	1	1	1	1	1	1	1	1	1	1	1	1	1	1	1	1	1	1	1	1	1	1	1	1	1	1	1	1	1	1	2	2	2	2	2	2	2	2

ELECTRICAL REPLACEMENT PARTS FOR NHB/NHP/NHMC MODELS

ITEM NO.	DESCRIPTION		NORTEC P/N	SINGLE PHASE													THREE PHASE																											
			MODEL	005	010						020						020				030				050				075				100				150				200			
			VOLTS/PH	/110-120/1	/208/1	/220-240/1	/277/1	/347/1	/440-480/1	/550-600/1	/208/1	/220-240/1	/277/1	/347/1	/440-480/1	/550-600/1	/208/3	/220-240/3	/440-480/3	/550-600/3	/208/3	/220-240/3	/440-480/3	/550-600/3	/208/3	/220-240/3	/440-480/3	/550-600/3	/208/3	/220-240/3	/440-480/3	/550-600/3	/208/3	/220-240/3	/440-480/3	/550-600/3	/208/3	/220-240/3	/440-480/3	/550-600/3	/208/3	/220-240/3	/440-480/3	/550-600/3
11	INDICATOR LAMP	YELLOW	135-3028	1	1	1	1	1	1	1	1	1	1	1	1	1	1	1	1	1	1	1	1	1	1	1	1	1	1	1	1	1	1	1	1	1	2	2	2	2	2	2	2	2
12	PC OUTPUT METER BOARD	NHP	135-9721	1	1	1	1	1	1	1	1	1	1	1	1	1	1	1	1	1	1	1	1	1	1	1	1	1	1	1	1	1	1	1	1	1	1	1	1	1	1	1	1	1
	LCD PC BOARD C/W CABLE	NHMC	135-9708	1	1	1	1	1	1	1	1	1	1	1	1	1	1	1	1	1	1	1	1	1	1	1	1	1	1	1	1	1	1	1	1	1	1	1	1	1	1	1	1	1
13	OUTPUT LED METER ASSLY	NHP	145-4402	1	1	1	1	1	1	1	1	1	1	1	1	1	1	1	1	1	1	1	1	1	1	1	1	1	1	1	1	1	1	1	1	1	1	1	1	1	1	1	1	1
	LCD KEYPAD ASSLY	NHMC	145-4403	1	1	1	1	1	1	1	1	1	1	1	1	1	1	1	1	1	1	1	1	1	1	1	1	1	1	1	1	1	1	1	1	1	1	1	1	1	1	1	1	1
14	PLASTIC FRAME	NHP/NHMC	135-1045	1	1	1	1	1	1	1	1	1	1	1	1	1	1	1	1	1	1	1	1	1	1	1	1	1	1	1	1	1	1	1	1	1	1	1	1	1	1	1	1	1
	BRACE	NHP/NHMC	135-1046	1	1	1	1	1	1	1	1	1	1	1	1	1	1	1	1	1	1	1	1	1	1	1	1	1	1	1	1	1	1	1	1	1	1	1	1	1	1	1	1	1
15	3.15A FUSE PC BOARD (SI2)		145-3003	1	1	1	1	1	1	1	1	1	1	1	1	1	1	1	1	1	1	1	1	1	1	1	1	1	1	1	1	1	1	1	1	1	2	2	2	2	2	2	2	2
	500 mA FUSE PC BOARD (SI1)	NHB	Consult Factory	1	1	1	1	1	1	1	1	1	1	1	1	1	1	1	1	1	1	1	1	1	1	1	1	1	1	1	1	1	1	1	1	1	2	2	2	2	2	2	2	2
	1A FUSE PC BOARD (SI1)	NHP/NHMC	Consult Factory	1	1	1	1	1	1	1	1	1	1	1	1	1	1	1	1	1	1	1	1	1	1	1	1	1	1	1	1	1	1	1	1	1	2	2	2	2	2	2	2	2
16	4 PT. L.V. CONTROL STRIP	NHB	145-3904	1	1	1	1	1	1	1	1	1	1	1	1	1	1	1	1	1	1	1	1	1	1	1	1	1	1	1	1	1	1	1	1	1	2	2	2	2	2	2	2	2
	5 PT. L.V. CONTROL STRIP	NHB	145-3905	1	1	1	1	1	1	1	1	1	1	1	1	1	1	1	1	1	1	1	1	1	1	1	1	1	1	1	1	1	1	1	1	1	2	2	2	2	2	2	2	2
	5 PT. L.V. CONTROL STRIP	NHP/NHMC	145-3905	1	1	1	1	1	1	1	1	1	1	1	1	1	1	1	1	1	1	1	1	1	1	1	1	1	1	1	1	1	1	1	1	1	2	2	2	2	2	2	2	2
	12 PT. L.V. CONTROL STRIP	NHP/NHMC	145-3912	1	1	1	1	1	1	1	1	1	1	1	1	1	1	1	1	1	1	1	1	1	1	1	1	1	1	1	1	1	1	1	1	1	2	2	2	2	2	2	2	2
17	GROUND CLAMP		132-3020	1	1	1	1	1	1	1	1	1	1	1	1	1	1	1	1	1	1	1	1	1	1	1	1	1	1	1	1	1	1	1	1	1	1	1	1	1	1	1	1	1
18	LOCK AND 1 KEY		185-3101	1	1	1	1	1	1	1	1	1	1	1	1	1	1	1	1	1	1	1	1	1	1	1	1	1	1	1	1	1	1	1	1	1	1	1	1	1	1	1	1	1
19	KEY FOR LOCK		185-3102	1	1	1	1	1	1	1	1	1	1	1	1	1	1	1	1	1	1	1	1	1	1	1	1	1	1	1	1	1	1	1	1	1	1	1	1	1	1	1	1	1
20	3 AMP FUSE - IN LINE		145-1003	1	1	1	1	1	1	1	1	1	1	1	1	1	1	1	1	1	1	1	1	1	1	1	1	1	1	1	1	1	1	1	1	1	2	2	2	2	2	2	2	2
21	USER INTERFACE PANEL	NHB	Consult Factory	1	1	1	1	1	1	1	1	1	1	1	1	1	1	1	1	1	1	1	1	1	1	1	1	1	1	1	1	1	1	1	1	1								
		NHB	Consult Factory																																		1	1	1	1	1	1	1	1
		NHP/NHMC	Consult Factory	1	1	1	1	1	1	1	1	1	1	1	1	1	1	1	1	1	1	1	1	1	1	1	1	1	1	1	1	1	1	1	1	1								
		NHP/NHMC	Consult Factory																																		1	1	1	1	1	1	1	1
22	TERMINAL BLOCK FOR		147-3002	1	1	1	1	1	1	1	1	1	1	1	1	1	1	1	1	1	1	1	1	1	1	1	1	1	1	1	1	1	1	1	1	1	2	2	2	2	2	2	2	2
	OPTIONAL BLOWER PACK																																											
23	RELAY	NHB/NHP	145-3020	1	1	1	1	1	1	1	1	1	1	1	1	1	1	1	1	1	1	1	1	1	1	1	1	1	1	1	1	1	1	1	1	1	2	2	2	2	2	2	2	2
	(NOT SHOWN)																																											
24	ELECTRICAL DOOR		145-7451	1	1	1	1	1	1	1	1	1	1	1	1	1	1	1	1	1	1	1	1	1																				
			145-7651																						1	1	1	1	1	1	1	1	1	1	1	1	1	1	1	1	1	1	1	1
25	ELECTRICAL SIDE COVER		145-7452	1	1	1	1	1	1	1	1	1	1	1	1	1	1	1	1	1	1	1	1	1																				
			145-7652																						1	1	1	1	1	1	1	1	1	1	1	1	1	1	1	1	1	1	1	1

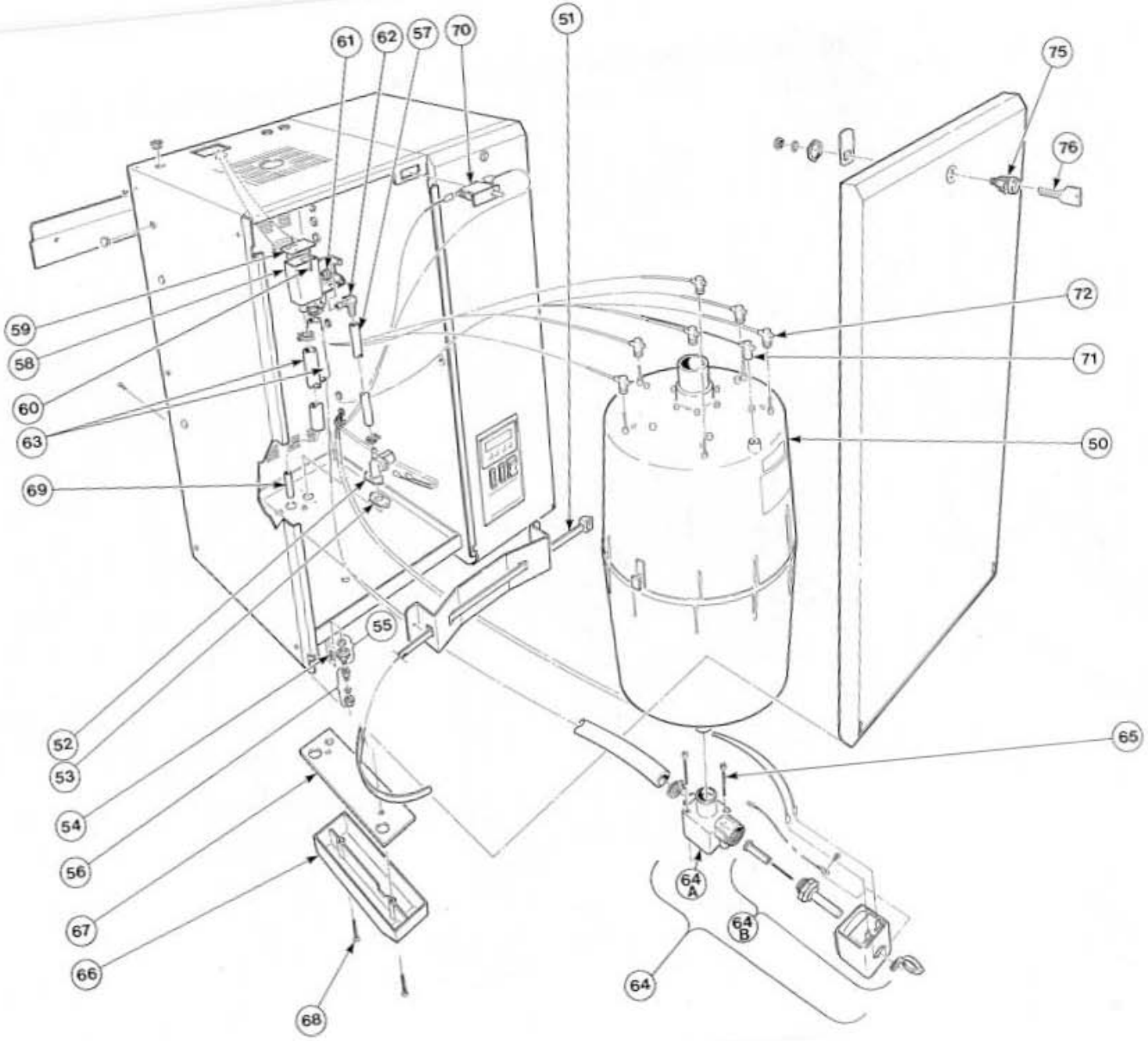
61
62
57
70
51
75
76
72
71
50
59
58
60
63
69
55
52
53
54
56
67
66
68
65
64A
64B
64

PLUMBING REPLACEMENT PARTS FOR NHB/NHP/NHMC MODELS

ITEM NO.	DESCRIPTION		NORTEC P/N	SINGLE PHASE													THREE PHASE																											
			MODEL	005	010						020						020				030				050				075				100				150				200			
			VOLTS/PH	/110-120/1	/208/1	/220-240/1	/277/1	/347/1	/440-480/1	/550-600/1	/208/1	/220-240/1	/277/1	/347/1	/440-480/1	/550-600/1	/208/3	/220-240/3	/440-480/3	/550-600/3	/208/3	/220-240/3	/440-480/3	/550-600/3	/208/3	/220-240/3	/440-480/3	/550-600/3	/208/3	/220-240/3	/440-480/3	/550-600/3	/208/3	/220-240/3	/440-480/3	/550-600/3	/208/3	/220-240/3	/440-480/3	/550-600/3	/208/3	/220-240/3	/440-480/3	/550-600/3
50	TO ORDER REPLACEMENT CYLINDERS QUOTE THE 3-DIGIT NUMBER ON THE CYL. BEING REPLACED OR QUOTE THE UNIT SERIAL NUMBER/MOBEL/VOLTAGE FROM THE SPEC. LABEL		CONSULT FACTORY																																									
51	REUSABLE TIE-WRAP	SMALL	151-3003	1	1	1	1	1	1	1	1	1	1	1	1	1	1	1	1	1	1	1	1	1																				
		LARGE	151-3005																						1	1	1	1	1	1	1	1	1	1	1	1	1	1	1	1	1	1	1	1
52	FILL VALVE ASSLY.	005-020	131-3244	1	1	1	1	1	1	1	1	1	1	1	1	1	1	1	1	1																								
	(INCLUDING MOUNTING FLANGE)	025-030	135-3017																		1	1	1	1																				
		050-075	135-3032																						1	1	1	1	1	1	1	1					2	2	2	2				
		100	135-3037																														1	1	1	1					2	2	2	2
53	FILL VALVE GASKET		145-5000	1	1	1	1	1	1	1	1	1	1	1	1	1	1	1	1	1	1	1	1	1	1	1	1	1	1	1	1	1	1	1	1	1	2	2	2	2	2	2	2	2
54	FILL VALVE SCREWS		145-5004	2	2	2	2	2	2	2	2	2	2	2	2	2	2	2	2	2	2	2	2	2	2	2	2	2	2	2	2	2	2	2	2	2	4	4	4	4	4	4	4	4
55	BRASS FITTING & WASHER		149-5072	1	1	1	1	1	1	1	1	1	1	1	1	1	1	1	1	1	1	1	1	1	1	1	1	1	1	1	1	1	1	1	1	1	2	2	2	2	2	2	2	2
56	3/8" STRAIGHT COMP. FTG.		145-6130	1	1	1	1	1	1	1	1	1	1	1	1	1	1	1	1	1	1	1	1	1	1	1	1	1	1	1	1	1	1	1	1	1	2	2	2	2	2	2	2	2
57	FILL CUP FILL HOSE		132-8850	1	1	1	1	1	1	1	1	1	1	1	1	1	1	1	1	1	1	1	1	1	1	1	1	1	1	1	1	1	1	1	1	1	2	2	2	2	2	2	2	2
	(SPECIFIY LENGTH)																																											
58	FILL CUP		135-1030	1	1	1	1	1	1	1	1	1	1	1	1	1	1	1	1	1	1	1	1	1	1	1	1	1	1	1	1	1	1	1	1	1	2	2	2	2	2	2	2	2
59	FILL CUP COVER		135-1035	1	1	1	1	1	1	1	1	1	1	1	1	1	1	1	1	1	1	1	1	1	1	1	1	1	1	1	1	1	1	1	1	1	2	2	2	2	2	2	2	2
60	FILL CUP SPLASH DIVERTER		135-1034	1	1	1	1	1	1	1	1	1	1	1	1	1	1	1	1	1	1	1	1	1	1	1	1	1	1	1	1	1	1	1	1	1	2	2	2	2	2	2	2	2
61	FILL CUP OUTLET GROMMET		135-3002	1	1	1	1	1	1	1	1	1	1	1	1	1	1	1	1	1	1	1	1	1	1	1	1	1	1	1	1	1	1	1	1	1	2	2	2	2	2	2	2	2
62	FILL CUP ELBOW		145-8014	1	1	1	1	1	1	1	1	1	1	1	1	1	1	1	1	1	1	1	1	1	1	1	1	1	1	1	1	1	1	1	1	1	2	2	2	2	2	2	2	2
63	FILL CUP DRAIN HOUSE		132-8860	1	1	1	1	1	1	1	1	1	1	1	1	1	1	1	1	1	1	1	1	1	1	1	1	1	1	1	1	1	1	1	1	1	2	2	2	2	2	2	2	2
	FILL CUP OVERFLOW HOSE		132-8860	1	1	1	1	1	1	1	1	1	1	1	1	1	1	1	1	1	1	1	1	1	1	1	1	1	1	1	1	1	1	1	1	1	2	2	2	2	2	2	2	2
	(SPECIFY LENGTH)																																											
64	DRAIN VALVE ASSLY		145-6000	1	1	1	1	1	1	1	1	1	1	1	1	1	1	1	1	1	1	1	1	1	1	1	1	1	1	1	1	1	1	1	1	1	2	2	2	2	2	2	2	2
	C/W 24V COIL																																											
64a	DRAIN VALVE - 3 PIECE ASSLY		132-6003	1	1	1	1	1	1	1	1	1	1	1	1	1	1	1	1	1	1	1	1	1	1	1	1	1	1	1	1	1	1	1	1	1	2	2	2	2	2	2	2	2
	NO COIL																																											
64b	DRAIN VALVE COIL ASSLY		132-6002	1	1	1	1	1	1	1	1	1	1	1	1	1	1	1	1	1	1	1	1	1	1	1	1	1	1	1	1	1	1	1	1	1	2	2	2	2	2	2	2	2
	(ASCO)																																											

PLUMBING REPLACEMENT PARTS FOR NHB/NHP/NHMC MODELS

ITEM NO.	DESCRIPTION		NORTEC P/N	SINGLE PHASE													THREE PHASE																											
			MODEL	005	010						020						020				030				050				075				100				150				200			
			VOLTS/PH	/110-120/1	/208/1	/220-240/1	/277/1	/347/1	/440-480/1	/550-600/1	/208/1	/220-240/1	/277/1	/347/1	/440-480/1	/550-600/1	/208/3	/220-240/3	/440-480/3	/550-600/3	/208/3	/220-240/3	/440-480/3	/550-600/3	/208/3	/220-240/3	/440-480/3	/550-600/3	/208/3	/220-240/3	/440-480/3	/550-600/3	/208/3	/220-240/3	/440-480/3	/550-600/3	/208/3	/220-240/3	/440-480/3	/550-600/3	/208/3	/220-240/3	/440-480/3	/550-600/3
	DRAIN VALVE O-RING		132-6004	1	1	1	1	1	1	1	1	1	1	1	1	1	1	1	1	1	1	1	1	1	1	1	1	1	1	1	1	1	1	1	1	1	2	2	2	2	2	2	2	2
	(not shown)																																											
65	DRAIN VALVE MOUNTING		145-5002	2	2	2	2	2	2	2	2	2	2	2	2	2	2	2	2	2	2	2	2	2	2	2	2	2	2	2	2	2	2	2	2	2	4	4	4	4	4	4	4	4
	SCREW																																											
66	DRAIN CANAL - RECTANGULAR		132-1218	1	1	1	1	1	1	1	1	1	1	1	1	1	1	1	1	1	1	1	1	1	1	1	1	1	1	1	1	1	1	1	1	1	2	2	2	2	2	2	2	2
67	DRAIN CANAL GASKET - RECT.		132-1220	1	1	1	1	1	1	1	1	1	1	1	1	1	1	1	1	1	1	1	1	1	1	1	1	1	1	1	1	1	1	1	1	1	2	2	2	2	2	2	2	2
68	DRAIN CANAL		145-5002	2	2	2	2	2	2	2	2	2	2	2	2	2	2	2	2	2	2	2	2	2	2	2	2	2	2	2	2	2	2	2	2	2	4	4	4	4	4	4	4	4
	MOUNTING SCREW																																											
69	DRAIN PAN OVERFLOW FTG.		132-880940	1	1	1	1	1	1	1	1	1	1	1	1	1	1	1	1	1	1	1	1	1	1	1	1	1	1	1	1	1	1	1	1	1	2	2	2	2	2	2	2	2
	(IF UNIT HAS BLOWER PACK)																																											
70	24V DOOR INTERLOCK		132-3091	1	1	1	1	1	1	1	1	1	1	1	1	1	1	1	1	1	1	1	1	1	1	1	1	1	1	1	1	1	1	1	1	1	2	2	2	2	2	2	2	2
	SWITCH																																											
71	SENSOR PLUG	WHITE	135-4012W	1	1	1	1	1	1	1	1	1	1	1	1	1	1	1	1	1	1	1	1	1	1	1	1	1	1	1	1	1	1	1	1	1	2	2	2	2	2	2	2	2
72	10AWG SPRING LOADED	BLACK	135-4012B	1	1	1	1	1	1	1	1	1	1	1	1	1	1	1	1	1	1	1	1	1	2	2	1	1	2	2	1	1			2	1	4	4	2	2			4	2
	CYLINDER PLUG	RED	135-4012R	1	1	1	1	1	1	1	1	1	1	1	1	1	1	1	1	1	1	1	1	1	2	2	1	1	2	2	1	1			2	1	4	4	2	2			4	2
		YELLOW	135-4012Y														1	1	1	1	1	1	1	1	2	2	1	1	2	2	1	1			2	1	4	4	2	2			4	2
	CYLINDER "SUPER" PLUG	BLACK	132-4264																														2	2							4	4		
	C/W 8AWG WIRE	YELLOW	132-7265																														2	2							4	4		
		RED	132-4266																														2	2							4	4		
73	STEAM HOSE	3/4" NOM.	132-8810	1	1	1	1	1	1	1	1	1	1	1	1	1	1	1	1	1	1	1	1	1	1																			
	(SPECIFY LENGTH, NOT SHOWN)	1-1/2" NOM.	132-8820																							1	1	1	1	1	1	1	1	1	1	1	1	1	1	1	1	1	1	1
74	CONDENSATE HOSE	3/8" NOM.	132-8840	1	1	1	1	1	1	1	1	1	1	1	1	1	1	1	1	1	1	1	1	1	1	1	1	1	1	1	1	1	1	1	1	1	2	2	2	2	2	2	2	2
	(SPECIFY LENGTH, NOT SHOWN)																																											
75	LOCK AND 1 KEY		185-3101	1	1	1	1	1	1	1	1	1	1	1	1	1	1	1	1	1	1	1	1	1	1	1	1	1	1	1	1	1	1	1	1	1	1	1	1	1	1	1	1	1
76	KEY FOR LOCK		185-3102	1	1	1	1	1	1	1	1	1	1	1	1	1	1	1	1	1	1	1	1	1	1	1	1	1	1	1	1	1	1	1	1	1	1	1	1	1	1	1	1	1
77	PLUMBING DOOR		145-7454	1	1	1	1	1	1	1	1	1	1	1	1	1	1	1	1	1	1	1	1	1																				
			145-7654																						1	1	1	1	1	1	1	1	1	1	1	1	2	2	2	2	2	2	2	2
78	MOUNTING BRACKET		145-7020	1	1	1	1	1	1	1	1	1	1	1	1	1	1	1	1	1	1	1	1	1																				
			145-7022																						1	1	1	1	1	1	1	1	1	1	1	1								
			145-7023																																		1	1	1	1	1	1	1	1