C. NH SERIES HUMIDIFIER SPARE PARTS

(1) See Figure 7 for the NHTC/NHPC plumbing compartment exploded view and spare parts and Table 2 for the parts list. See Figure 8 for the NHTC/NHPC electrical compartment exploded view and spare parts and Table 3 for the parts list.

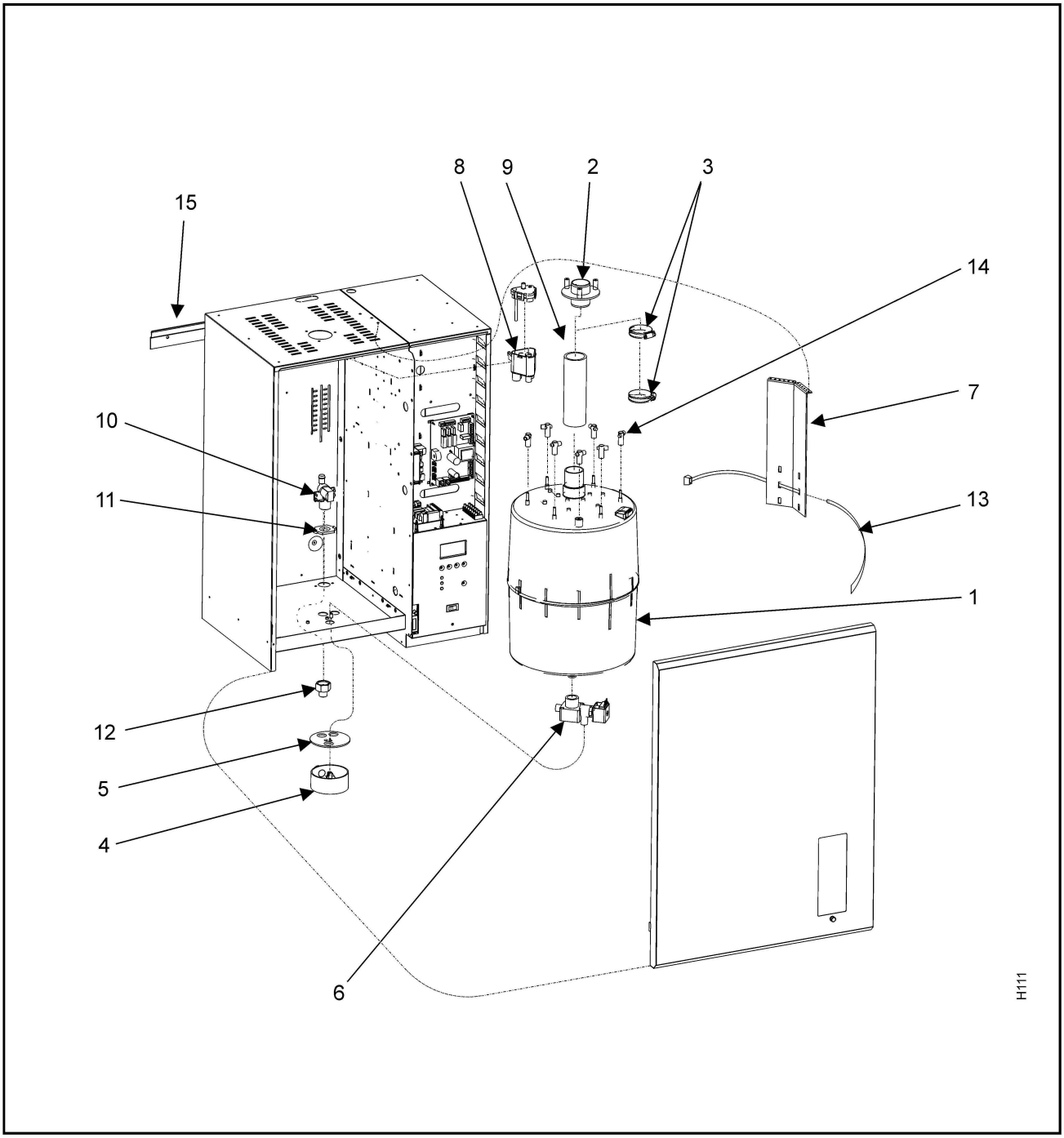

Figure 7. NHTC/NHPC Plumbing Compartment Exploded View and Spare Parts

Table 2. NHTC/NHPC Plumbing Part List

ITEM NO.	DESCRIPTION	NORTEC PART NO.	SINGLE PHASE													THREE PHASE																																			
		MODEL	005	010							020						020					030					050					075					100					150					200				
		VOLTS/PH	110-120	208/1	220-240/1	227/1	380/1	440-480/1	550-600/1	208/1	220-240/1	277/1	380/1	440-481/1	550-600/1	208/3	220-240/3	380/3	440-480/3	550-600/3	208/3	220-240/3	380/3	440-480/3	550-600/3	208/3	220-240/3	380/3	440-480/3	550-600/3	208/3	220-240/3	380/3	440-480/3	550-600/3	208/3	220-240/3	380/3	440-480/3	550-600/3	208/3	220-240/3	380/3	440-480/3	550-600/3	208/3	220-240/3	380/3	440-480/3	550-600/3
1	CYLINDER 201 X	150-9724																																																		
	CYLINDER 202 X	150-9725	1	1	1	1																																														
	CYLINDER 203 X	150-9726					1																																													
	CYLINDER 204 X	150-9727						1	1																																											
	CYLINDER 321 X	150-9732								1	1	1																																								
	CYLINDER 305 X	150-9729											1																																							
	CYLINDER 309 X	150-9730												1	1																																					
	CYLINDER 311 X	150-9731																1	1	1																																
	CYLINDER 303 X	150-9728														1	1																																			
	CYLINDER 331 X	150-9733																																																		
	CYLINDER 333 X	150-9734																																																		
	CYLINDER 421 X	150-9738																			1	1																														
	CYLINDER 407 X	150-9736																					1																													
	CYLINDER 411 X	150-9737																						1	1																											
	CYLINDER 621 X	150-9744																								1	1				1	1				1	1				2	2				2	2			
	CYLINDER 603 X	150-9739																										1					1					1						2					2		
	CYLINDER 607 X	150-9741																											1	1				1	1					1				2	2					2
	CYLINDER 605 X	150-9740																																					1										2	
	CYLINDER 609 X	150-9742																																																		
	CYLINDER 617 X	150-9743																																																		
	CYLINDER 631 X	150-9745																																																		
	CYLINDER 636 X	150-9746																																																		
2	STEAM OUTLET, LARGE, NHTC ONLY	150-9465																								1	1	1	1	1	1	1	1	1	1	1	1	1	1	1	2	2	2	2	2	2	2	2	2	2
	STEAM OUTLET, SMALL, NHTC ONLY	150-9466	1	1	1	1	1	1	1	1	1	1	1	1	1	1	1	1	1	1	1	1	1	1	1																										
3	CLAMP FOR SMALL STEAM LINE	132-5007	2	2	2	2	2	2	2	2	2	2	2	2	2	2	2	2	2	2	2	2	2	2	2																										
	CLAMP FOR LARGE STEAM LINE	132-5009																								2	2	2	2	2	2	2	2	2	2	2	2	2	2	2	4	4	4	4	4	4	4	4	4	4
4	DRAIN CHANNEL	111-6857	1	1	1	1	1	1	1	1	1	1	1	1	1	1	1	1	1	1	1	1	1	1	1	1	1	1	1	1	1	1	1	1	1	1	1	1	1	1	2	2	2	2	2	2	2	2	2	2
5	DRAIN CHANNEL GASKET	163-1026	1	1	1	1	1	1	1	1	1	1	1	1	1	1	1	1	1	1	1	1	1	1	1	1	1	1	1	1	1	1	1	1	1	1	1	1	1	1	2	2	2	2	2	2	2	2	2	2
6	VALVE DRAIN 93BEIGE + 24V COIL	145-6000	1	1	1	1	1	1	1	1	1	1	1	1	1	1	1	1	1	1	1	1	1	1	1	1	1	1	1	1	1	1	1	1	1	1	1	1	1	1	2	2	2	2	2	2	2	2	2	2
7	CYLINDER BRACKET	150-9593	1	1	1	1	1	1	1	1	1	1	1	1	1	1	1	1	1	1	1	1	1	1	1	1	1	1	1	1	1	1	1	1	1	1	1	1	1	1	2	2	2	2	2	2	2	2	2	2
8	FILL CUP ASSEMBLY SMALL	252-2406	1	1	1	1	1	1	1	1	1	1	1	1	1	1	1	1	1	1	1	1	1	1	1																										
	FILL CUP ASSEMBLY LARGE	252-2407																								1	1	1	1	1	1	1	1	1	1	1	1	1	1	1	2	2	2	2	2	2	2	2	2	2
9	SMALL STEAM LINE 0.875 IN. ID 9.000 IN.	132-8810	1	1	1	1	1	1	1																																										
	SMALL STEAM LINE 0.875 IN. ID 5.000 IN.	132-8810								1	1	1	1	1	1	1	1	1	1	1																															
	SMALL STEAM LINE 0.875 IN. ID 4.500 IN.	132-8820																			1	1	1	1	1																										
	LARGE STEAM LINE 1.500 IN. ID 7.000 IN.	132-8820																								1	1	1	1	1	1	1	1	1	1	1	1	1	1	1	2	2	2	2	2	2	2	2	2	2

Nortec
www.humidity.com

Table 2. NHTC/NHPC Plumbing Part List (cont)

ITEM NO.	DESCRIPTION	NORTEC PART NO.	SINGLE PHASE													THREE PHASE																																			
		MODEL	005	010						020						020					030					050					075					100					150					200				
		VOLTS/PH	110-120	208/1	220-240/1	227/1	380/1	440-480/1	550-600/1	208/1	220-240/1	277/1	380/1	440-481/1	550-600/1	208/3	220-240/3	380/3	440-480/3	550-600/3	208/3	220-240/3	380/3	440-480/3	550-600/3	208/3	220-240/3	380/3	440-480/3	550-600/3	208/3	220-240/3	380/3	440-480/3	550-600/3	208/3	220-240/3	380/3	440-480/3	550-600/3	208/3	220-240/3	380/3	440-480/3	550-600/3	208/3	220-240/3	380/3	440-480/3	550-600/3
10	VALVE, SINGLE FILL, 0.5 L/min	131-3244	1	1	1	1	1	1	1	1	1	1	1	1	1	1	1	1	1	1																															
	VALVE, SINGLE FILL, 1.2 L/min	135-3017																			1	1	1	1	1																									
	VALVE, SINGLE FILL, 2.0 L/min	135-3032																								1	1	1	1	1	1	1	1	1	1						2	2	2	2	2					
	VALVE, SINGLE FILL, 3.3L/min	135-3037																																		1	1	1	1	1						2	2	2	2	2
11	GASKET FOR FILL THRU CAB	145-5000	1	1	1	1	1	1	1	1	1	1	1	1	1	1	1	1	1	1	1	1	1	1	1	1	1	1	1	1	1	1	1	1	1	1	1	1	1	1	2	2	2	2	2	2	2	2	2	2
12	FITTING BRASS 3/4 BSP / WASHER -1/2"NPT	150-6288	1	1	1	1	1	1	1	1	1	1	1	1	1	1	1	1	1	1	1	1	1	1	1	1	1	1	1	1	1	1	1	1	1	1	1	1	1	1	2	2	2	2	2	2	2	2	2	2
13	CABLE TIE REUSABLE 1-400 CYL SZ	151-3003	1	1	1	1	1	1	1	1	1	1	1	1	1	1	1	1	1	1	1	1	1	1	1																									
	CABLE TIE REUSABLE 5-600 CYL SZ	151-3005																								1	1	1	1	1	1	1	1	1	1	1	1	1	1	1	2	2	2	2	2	2	2	2	2	2
14	CYL PLUG WITH BLACK MARKER	151-0046	1	1	1	1	1	1	1	1	1	1	1	1	1	1	1	1	1	1	1	1	1	1	1	2	2	2	1	1	2	2	2	1	1			2	2	1	4	4	4	2	2			4	4	2
	CYL PLUG WITH YELLOW MARKER	151-0049																			1	1	1	1	1	2	2	2	1	1	2	2	2	1	1			2	2	1	4	4	4	2	2			4	4	2
	CYL PLUG WITH RED MARKER	151-0047	1	1	1	1	1	1	1	1	1	1	1	1	1	1	1	1	1	1	1	1	1	1	1	2	2	2	1	1	2	2	2	1	1			2	2	1	4	4	4	2	2			4	4	2
	CYLINDER PLUG 5MM 15A (HWS) MODIFIED	150-4150	1	1	1	1	1	1	1	1	1	1	1	1	1	1	1	1	1	1	1	1	1	1	1	1	1	1	1	1	1	1	1	1	1	1	1	1	1	1	2	2	2	2	2	2	2	2	2	2
	SUPER PLUG /W WIRE WITH BLACK MARKER	132-4264																																		2	2									4	4			
	SUPER PLUG /W WIRE WITH YELLOW MARKER	132-4265																																		2	2									4	4			
	SUPER PLUG W/ WIRE WITH RED MARKER	132-4266																																		2	2									4	4			
15	WALL BRACKET 5-30 LBS	145-7020	1	1	1	1	1	1	1	1	1	1	1	1	1	1	1	1	1	1	1	1	1	1	1																									
	WALL BRACKET 50-100 LBS	145-7022																								1	1	1	1	1	1	1	1	1	1	1	1	1	1	1										
	WALL BRACKET 150-200 LBS	145-7023																																							1	1	1	1	1	1	1	1	1	1
	OPTIONAL COMPONENTS																																																		
	FOAM DETECTION OPTION																																																		
	FLOAT ASSEMBLY, FOAM DETECTION	252-3334	1	1	1	1	1	1	1	1	1	1	1	1	1	1	1	1	1	1	1	1	1	1	1	1	1	1	1	1	1	1	1	1	1	1	1	1	1	1	2	2	2	2	2	2	2	2	2	2
	FILL CUP EXTENSION KIT																																																		
	FILLCUP EXTENSION KIT NHTC/NHPC	252-2160	1	1	1	1	1	1	1	1	1	1	1	1	1	1	1	1	1	1	1	1	1	1	1	1	1	1	1	1	1	1	1	1	1	1	1	1	1	1	2	2	2	2	2	2	2	2	2	2
	DRAIN WATER COOLING																																																		
10	VALVE, DUAL FILL, 3.3 L/min, 0.5 L/min	150-9698		1	1	1	1	1	1	1	1	1	1	1	1	1	1	1	1	1	1																													
	VALVE, DUAL FILL, 3.3 L/min, 1.2 L/min																				1	1	1	1	1																									
	VALVE, DUAL FILL, 3.3 L/min, 2.0 L/min																									1	1	1	1	1	1	1	1	1	1						2	2	2	2	2					
	VALVE, DUAL FILL, 3.3 L/min, 3.3L/min																																			1	1	1	1	1						2	2	2	2	2

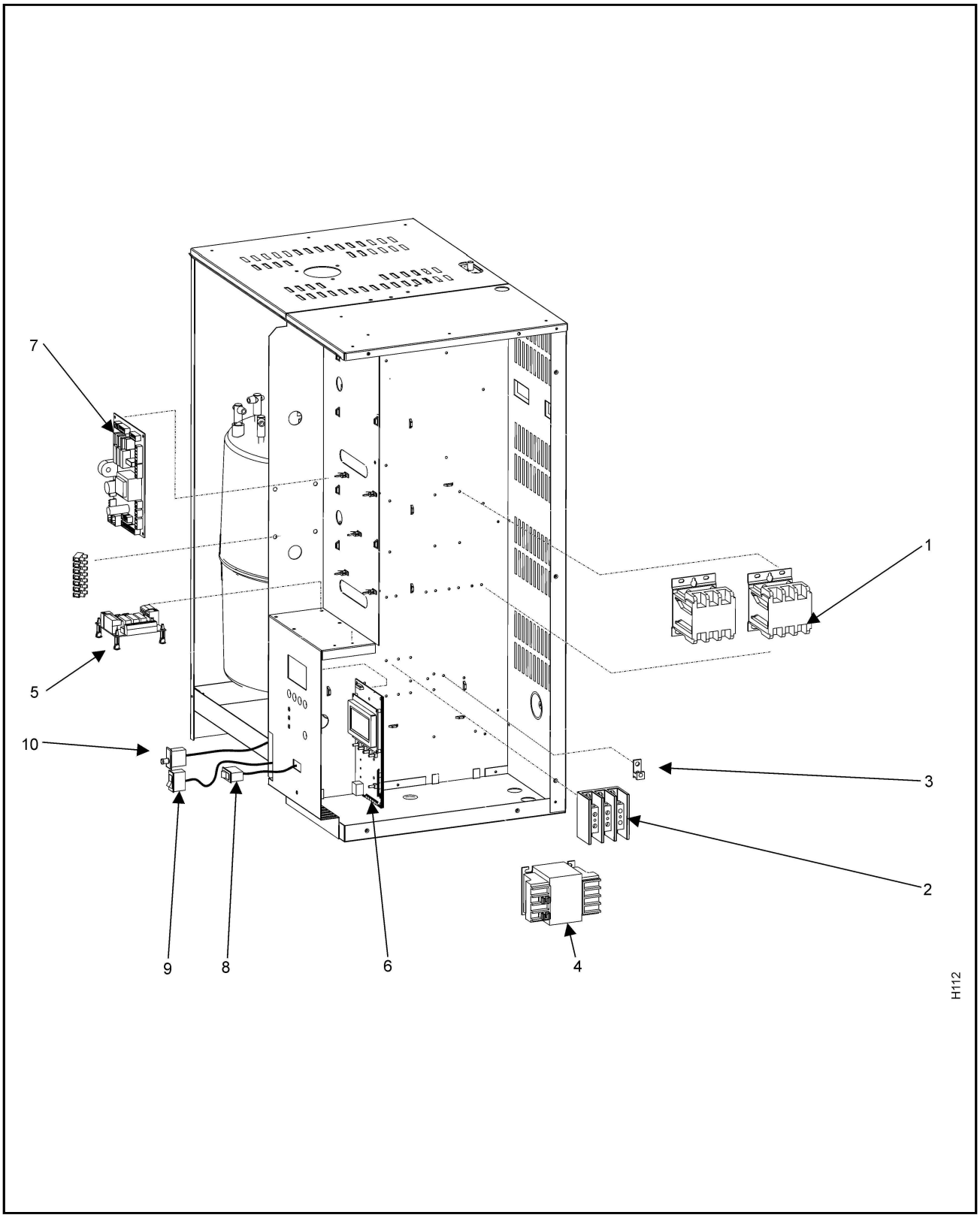

Figure 8. NHTC/NHPC Electrical Compartment Exploded View and Spare Parts

Table 3. NHTC/NHPC Electrical Parts List

ITEM NO.	DESCRIPTION	NORTEC PART NO.	SINGLE PHASE													THREE PHASE																																			
		MODEL	005	010							020						020					030					050					075					100					150					200				
		VOLTS/PH	110-120	208/1	220-240/1	227/1	380/1	440-480/1	550-600/1	208/1	220-240/1	277/1	380/1	440-481/1	550-600/1	208/3	220-240/3	380/3	440-480/3	550-600/3	208/3	220-240/3	380/3	440-480/3	550-600/3	208/3	220-240/3	380/3	440-480/3	550-600/3	208/3	220-240/3	380/3	440-480/3	550-600/3	208/3	220-240/3	380/3	440-480/3	550-600/3	208/3	220-240/3	380/3	440-480/3	550-600/3	208/3	220-240/3	380/3	440-480/3	550-600/3
1	CONTACTOR 30 AMP 1PH	145-3013	1	1	1	1	1	1	1				1	1	1																																				
	CONTACTOR 30 AMP 3PH	132-3013														1	1	1	1	1			1	1	1	2	2	2	1	1			2		1				2				4		2				4	
	CONTACTOR 40 AMP 3PH	132-3014								1	1	1									1	1									2	2		1				2		1	4	4		2				4		2
	CONTACTOR 62 AMP 3PH	132-3015																																		2	2		1								4	4			
2	TERMINAL BLOCK 2 POLE 95A	132-3001	1	1	1	1	1	1	1	1	1	1	1	1	1																																				
	TERMINAL BLOCK 3 POLE 95 AMP	132-3027														1	1	1	1	1	1	1	1	1	1	1	1	1	1	1		1	1	1	1			1	1	1				1	1					1
	TERMINAL BLOCK 3 POLE 150 AMP	132-3028																													1					1	1					1	1					1	1	
	TERM. BLOCK 3 POLE 310 AMPU	132-3030																																							1					1	1			
3	GROUND CLAMP	132-3020	1	1	1	1	1	1	1	1	1	1	1	1	1	1	1	1	1	1	1	1	1	1	1	1	1	1	1	1	1	1	1	1	1	1	1	1	1	1	1	1	1	1	1	1	1	1	1	1	1
4	TRANSFORMER 120/24 VAC 75 VA	142-3110	1																																																
	TRANSFORMER 208 24V 75VA	132-3208		1						1						1					1					1					1					1														
	TRANSFORMER 240/24 VAC 75 VA	132-3230			1						1						1					1					1					1					1													
	TRANSFORMER 277/24V 75VA	132-3277				1						1																																							
	TRANSFORMER 380/24V 75VA	132-3380					1						1					1					1					1					1					1												
	TRANSFORMER 480/24 VAC 75 VA	132-3460						1						1					1					1					1					1					1											
	TRANSFORMER 600/24 VAC 75 VA	132-3575							1						1					1					1					1					1					1										
	TX 24VAC 150VA, PRIMARY 208	252-2318																																							1					1				
	TX 24VAC 150VA, PRIMARY 240	252-2319																																								1					1			
	TX 24VAC 150VA, PRIMARY 480	252-2320																																										1					1	
	TX 24VAC 150VA, PRIMARY 600	252-2321																																											1					1
	TX 24VAC 150VA, PRIMARY 380	252-2322																																									1					1		
5	PCB FAULT REMOTE (OPTION)	252-1279																																																	
6	PCB PROCESSOR NHPC (NOT SHOWN)	252-1274	1	1	1	1	1	1	1	1	1	1	1	1	1	1	1	1	1	1	1	1	1	1	1	1	1	1	1	1	1	1	1	1	1	1	1	1	1	1	1	1	1	1	1	1	1	1	1	1	1
	PCB PROCESSOR NHTC	252-1277	1	1	1	1	1	1	1	1	1	1	1	1	1	1	1	1	1	1	1	1	1	1	1	1	1	1	1	1	1	1	1	1	1	1	1	1	1	1	1	1	1	1	1	1	1	1	1	1	1
7	PCB DRIVER NHPC, NHTC INCL. ELECTRICITY CONVERTER	252-1278	1	1	1	1	1	1	1	1	1	1	1	1	1	1	1	1	1	1	1	1	1	1	1	1	1	1	1	1	1	1	1	1	1	1	1	1	1	1	2	2	2	2	2	2	2	2	2	2	2
8	SWITCH, ROCKER, DPST	252-2489	1	1	1	1	1	1	1	1	1	1	1	1	1	1	1	1	1	1	1	1	1	1	1	1	1	1	1	1	1	1	1	1	1	1	1	1	1	1	1	1	1	1	1	1	1	1	1	1	1
9	SWITCH SPST 208-240V	147-3010	1	1	1	1	1	1	1	1	1	1	1	1	1	1	1	1	1	1	1	1	1	1	1	1	1	1	1	1	1	1	1	1	1	1	1	1	1	1	1	1	1	1	1	1	1	1	1	1	1
10	SWITCH INTERLOCK IDM 423	132-3091	1	1	1	1	1	1	1	1	1	1	1	1	1	1	1	1	1	1	1	1	1	1	1	1	1	1	1	1	1	1	1	1	1	1	1	1	1	1	1	1	1	1	1	1	1	1	1	1	1
NOT SHOWN	CABLE RIBBON 40 PIN NHTC/NHPC	252-2061	1	1	1	1	1	1	1	1	1	1	1	1	1	1	1	1	1	1	1	1	1	1	1	1	1	1	1	1	1	1	1	1	1	1	1	1	1	1	2	2	2	2	2	2	2	2	2	2	2
	CABLE RIBBON 10 PIN NHTC FAULT	252-2062	1	1	1	1	1	1	1	1	1	1	1	1	1	1	1	1	1	1	1	1	1	1	1	1	1	1	1	1	1	1	1	1	1	1	1	1	1	1	2	2	2	2	2	2	2	2	2	2	2
	CABLE EPROM SMALL	252-2033	1	1	1	1	1	1	1	1	1	1	1	1	1	1	1	1	1	1	1	1	1	1	1																										
	CABLE EPROM LARGE	252-2037																								1	1	1	1	1	1	1	1	1	1	1	1	1	1	1	1	1	1	1	1	1	1	1	1	1	1
	CABLE EPROM DOUBLE	252-2060																																							1	1	1	1	1	1	1	1	1	1	1

Table 3. NHTC/NHPC Electrical Parts List (cont)

| ITEM NO. | DESCRIPTION | NORTEC PART NO. | SINGLE PHASE | | | | | | | | | | | | | THREE PHASE | | | | | | | | | | | | |